DESCRIPTION:
VISCOMAT 70/90

CODE:
LR_P00025

LAST RELEASE:
AUGUST 2023

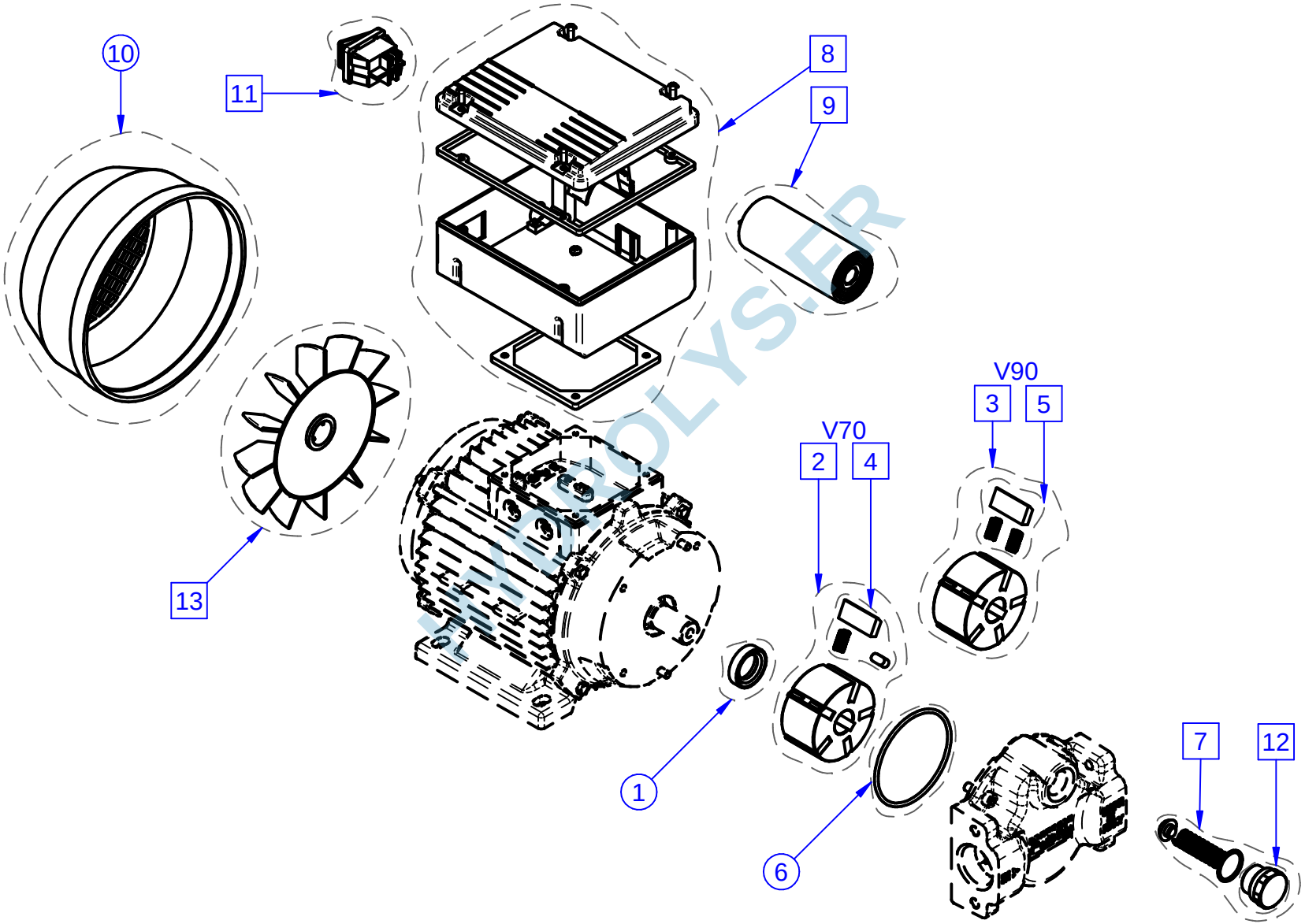

Some components may vary in shape and color or not be present. Always follow codes and quantity shown in list. ○ fixed components □ variable components - - - only reference

The information contained in this drawing is property of PIUSI and any reproduction in part or as a whole without the written permission of PIUSI S.p.a. is prohibited.